True cost of work road crashes

CARRS-Q estimates the cost of a fleet crash averages $28,122 per incident.

Where the rubber hits the road

Behind the wheel and under the hood of small private and fleet vehicles lies employer responsibility.

Words: **Denise Cullen**

Matt Barker was on his way to a client meeting at Griffith when the accident happened. As an agronomist for Elders Deniliquin, he spent most of his time in the field, driving up to 2000 kilometres a week. But on this morning in 2012, he lost concentration for a moment. His car left the road.

"I hit the skids, hit the ditch, came over an embankment, and my ute landed in the water," he explains in a video which was prepared as part of the Elders group 'Stand Up Speak Up' road safety initiative and can still be viewed on The National Road Safety Partnership Program (NRSPP) website.

Barker panicked as the ute began to fill with water. He escaped out the passenger door and onto the tray, before collapsing face down on the riverbank. He'd shattered a foot and broken two vertebrae in his back—injuries that required two weeks in hospital. But he was, at least, alive.

Barker's experience is one of hundreds occurring across Australia every year. Many have more sombre endings. For example, Safe Work Australia's most recent 'Work-related Traumatic Injury Fatalities Australia' report, released in October 2015, found that road crashes were the leading cause of workplace fatalities. More than three in every five (61 per cent) of the previous year's 188 fatalities involved a vehicle, with 71 workers (38 per cent) killed in a vehicle collision—well ahead of workers killed after being hit by moving objects, or falling from a height (both 11 per cent).

The costs associated with this are considerable. A 2012 'State of the Road' report by the Centre for Accident Research and Road Safety—Queensland (CARRS-Q) found that work-related road crash injuries in Australia cost around $500 million annually—more if you count often-overlooked costs including personal injuries, medical expenses, absence from work, workers compensation, loss of productivity, administration, destruction of assets, retraining and insurance premiums. Indeed, CARRS-Q estimates that the true cost of a fleet crash, inclusive of property damage, workers compensation and third party costs, averages $28,122 per incident.

> JUST BECAUSE IT'S SOMEONE ELSE'S CAR DOESN'T MEAN IT'S SOMEONE ELSE'S PROBLEM—THE OBLIGATION DOES NOT CHANGE.

Other research suggests that when it comes to managing workers' health and safety behind the wheel, some employers are running on a wing and a prayer. For instance, a 2012 study by the National Roads and Motorists' Association (NRMA) revealed that while almost nine in ten (87 per cent) employers trust their staff to ▸

drive safely, nearly half (49 per cent) had experienced damage to fleet vehicles driven by staff and, of these, more than two-thirds (68 per cent) of vehicles had sustained sufficiently serious damage to be taken off the road.

Nicole Fauvrelle, a partner with Sparke Helmore Lawyers, says many employers are yet to grasp their responsibilities to ensure the safe use of vehicles, and to implement procedures and processes supportive of that aim. "The legislative obligations of employers, regardless of the type of vehicle, are the same," says Fauvrelle. "WHS legislation deems the vehicle as a workplace (so) employers must ensure so far as reasonably practicable that the workplace is safe."

Fauvrelle notes: "It is an emerging area and one that employers need to be attuned to—they need not wait until a regulator determines it has the appetite to focus on it as an area of interest."

Civil proceedings may also be brought against employers quite separate to prosecution proceedings, she adds.

Employers may struggle when managing their 'grey fleet'— privately-owned vehicles which employees use to travel on company business, claiming back, say, a mileage allowance. They must understand that just because it's someone else's car doesn't mean it's someone else's problem. "The obligation does not change," says Fauvrelle.

Dimitra Vlahomitros, senior policy adviser on road safety with the NRMA, says too few employers proactively monitor and risk control employees' driving behaviour in the workplace. For example, an NRMA BusinessWise survey released in 2015 revealed that while one-third (34 per cent) of businesses check staff hold a valid licence annually, only 11 per cent check monthly—and one in five (19 per cent) employers never check. Further, nearly

half of all employers never check whether staff members use drugs or alcohol during work hours (44 per cent) or the number of driving demerit points staff have accrued (43 per cent).

Companies seeking to step up their approach to road safety are commonly advised to implement a safe driving policy, covering vehicle selection and maintenance as well as all the usual suspects with regard to driver behaviour—breaking road rules through speeding or illegal parking, driving when fatigued, driving under the influence of drugs or alcohol, not wearing a seatbelt ▸

HOSE HANDLING SAFETY SOLUTIONS

The **RIGHT** hose reel can help reduce work place injury, the **WRONG** reel could be a costly mistake.

HOSE TRIP HAZARDS

Hose left unstored/incorrectly stored can be a major trip hazard in workplace.

THE RIGHT REEL CAN HELP

UNSAFE REWIND SPEEDS

can strike equipment & employees, causing costly maintenance, down-time and hose 'whip' injury.

REEL TECH HAS SAFER REWIND SOLUTIONS

DIFFICULT HOSE PAYOUT

Hose payout resistance found in older reel technologies can cause strain injury to operators.

REEL TECH'S EZI-DEPLOY™ CAN HELP

FlatWinder™

Efficient, jam-free layering of hose during storage. Auto de-clutching systems reels reduce effort required for payout.

Safe-R-Reel™

Safe-R-Reel™ Speed control systems can also be fitted to spring powered reels, ensures a controlled rewind speed in event of operator losing control of hose during rewind.

Reel-In-Control™

Cut response times and increase safety. Introducing single-operator hose reel solutions that include Reel-In-Control™ wireless remote control.

EZI-Deploy™

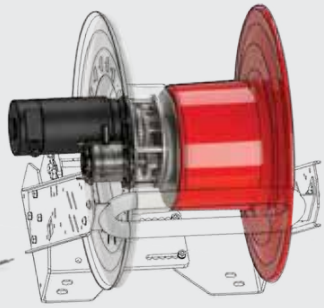

Fully automatic "Drag-free" payout with the lowest resistance, **EZI-Deploy™ clutch system dramatically reduces hose payout force minimising operator strain injuries.**

REEL TECH
Toughest for the Roughest

Reel Safety with Safe-R-Reel™

Reel Tech has been serving industries for over 25 years, and continues to deliver the toughest hose and cable reels for the roughest environments. **We have a full range of industry and technical specifications for all your custom needs.**

Solutions for
Food
Transport
Government
Industry

10 FACTS of Hose Reel Safety handbook

Request for a free copy today
Hose reels in the workplace
Helping you identify
the risks & responsibilities

sales@reeltech.com.au

1800 REELIN **sales@reeltech.com.au** **www.reeltec.com.au**

ALMOST NINE IN TEN EMPLOYERS TRUST THEIR STAFF TO DRIVE SAFELY, [BUT] NEARLY HALF HAD EXPERIENCED DAMAGE TO FLEET VEHICLES.

and carrying unauthorised passengers. Yet, save for the speeding ticket that arrives for the corporate car, the dent that mysteriously appears on the bumper bar, or the fuel tank that rapidly empties in response to aggressive driving practices, it can be difficult to monitor employee adherence to such policies.

Increasingly, attention is turning to other factors. A 2013 article published in the *Journal of the Australasian College of Road Safety* highlighted the inherent risks in road travel, noting that every 1 per cent reduction in vehicle kilometres travelled resulted in a corresponding reduction in the incidence of crashes of up to 1.8 per cent. Thus, intervention focused on reducing car trips are recommended by the World Health Organization (WHO) as an effective way of preventing road traffic injury. South Australia's 'smarter travel @ work' program, which encourages initiatives including journey planning, carpooling, cycling and the use of public transport, is a good example of this in action.

Yet technological developments may still refocus the lens on drivers. The Australian Naturalistic Driving Study is currently using video cameras, still cameras, GPS, radar, accelerometers and a range of other in-car data collection systems to shed fresh light on what's happening behind the wheel. Lead investigator Raphael Grzebieta, a professor of road safety at the Transport and Road Safety (TARS) research unit at the University of New South Wales, says 360 volunteers are having their vehicles fitted with these technologies to capture their driving behaviour (such as where they are looking), their vehicle's behaviour (such as speed and lane position) and the behaviour of other road users with whom they interact.

It's a statistical probability that at least some participants in the study will be involved in an accident. ("We've already had one bingle," Grzebieta says.) However, he stresses the point is not to probe what happens when things go wrong. Rather researchers will explore everyday driving experiences—how drivers avoid collisions, how they sidestep hazards such as pedestrians darting across the road, and how they handle difficult situations such as busy intersections with broken traffic lights. The results will be used to inform the development of new road safety programs, policies and products.

With its team of watchers, the Australian Naturalistic Driving Study may also prove to be a harbinger of things to come. Already, Grzebieta notes, some employers are introducing technologies that dob in habitual speeders, awaken tired drivers from a microsleep, track drivers' movements using GPS, or record the circumstances leading up to crashes. Though they may soon become as common as the alarm that beeps when you fail to fasten your seatbelt, Fauvrelle acknowledges employee resistance to some of these technologies. "They say, 'Why should you know where I am every moment of the day?'" she says."But when you're at work, and driving for work, those privacy considerations fall away."

Next-generation Ansell INTERCEPT Technology™ integrates proprietary, cut-resistant engineered fibers in soft blended yarns that provide the ultimate in comfort, performance and protection. The technology is featured in a range of new HyFlex® cut resistant gloves including innovative ultra light-weight styles..

INTERCEPT™
Cut Resistance Technology

Learn more/request a sample:
ppe.ansell.com.au/intercept

Ansell